The Tribune Radio—Comment and Advice

Conducted by JACK BINNS

First Aid for Radio Fans

Radio Receiver in Camp: How an Airplane Sends: Aerial and Tension Wires

Building Regenerative Set

Question—(1) I am considering building a single circuit regenerative V. T. receiver. I understand this is very sensitive, but not very selective. How can it be made more selective without decreasing the sensitiveness? (2) Could this same tuning coil with tickler be used in connection with a crystal detector, as shown in Figures 2, 3 and 4? Which of these hook-ups would you consider the best? (3) Will you kindly furnish data for building an amplifying transformer, including dimensions of core, size of wire and number of turns for both primary and secondary. Do Figures 6, 8 and 7 show the best design? (4) Would any 60-cycle hum be heard in the phones if the filament were lighted by 6-volt A. C. as shown in Figure 8? If there is any hum in such a circuit would a fixed condenser shunted across the filament terminals eliminate it? What size should a condenser be? (5) Is a V. T. receiving circuit made regenerative by tuning the phone circuit into resonance with the secondary circuit? (6) I reside on the first floor of a brown-stone front, which is four stories high. Eight and ten-story buildings are in adjacent blocks. The only place I have for an aerial is on the roof, which is 20x80 feet. Could I arrange it as shown in Figure 8?—D. L. D.

Answer—(1) It can be made a little more selective by using a vario-coupler instead of just a tuning coil for the primary and secondary. All that would be necessary in your particular case to do would be to place a secondary similar to the tickler inside the primary tube. (2) It is impossible to use a tickler coil with a crystal detector, consequently none of your three diagrams is of any value. In your Figure 2 the tickler coil would act as a fixed secondary inductance; in Figure 3, as a loose coupler, and in Figure 4 as a loading coil—none of which would be of any value to you. (3) For the construction of any amplifying transformer it will be necessary to use the form of core indicated in Figure 7—the secondary winding being wound over the primary. The core should be made up of laminations of Swedish iron, annealed; each lamination should be about one 10,000th of an inch in thickness, and it should be shellacked before being placed on the preceding layer, in order to eliminate eddy currents. The windings should be of No. 44 enamel covered wire. The inside diameter of the spool should be ⅝ inch, and the primary should have 1,700 turns. Each layer of the primary should be insulated with paper. The secondary, being wound directly on top of the primary, consists of 20,000 turns, and each layer of the secondary also being insulated with paper. When complete, the direct current resistance of the primary should be 1,075 ohms, and the D. C. resistance of the secondary should be 17,000 ohms. (4) I think that you will find the A. C. hum will be very disturbing. I do not know of any real substitute for the storage battery for the purpose of lighting the filament. (5) A. V. T. receiving circuit can be made regenerative by tuning the phone circuit into resonance with the secondary circuit. This can be done in the usual way, with inductance and capacity. (6) The aerial that you describe in Figure 9 should be all right.

Radio in Camp

Question—What is a good hook-up to install in a camp 270 miles from New York at an approximate elevation of 750 feet? Can I attach a loud speaker without much complication?—J. H. T.

Answer—It will depend on how far you are from the nearest broadcasting station. At that distance I do not think you will be able to get loud-speaking results without the addition of a power amplifier on top of two stages of audio-frequency amplification. Of course, if the camp is so located that one of the broadcasting stations is close to it you will be able to hear with an ordinary regenerative set.

Indoor Aerials

Question—I am not able to erect an aerial on the roof. I have thought of the following substitutes for a roof aerial: (1) bed spring, (2) loop aerial, (3) single copper wire stretched from one window to another of my apartment (I can get about 40 feet stretched this way), (4) connect it to the binding post of the nearest door-bell (I feel that this will give me the stretch of all bell wires throughout the seven floors of the house, the wire carrying no current except when bell is rung), (5) erect a single copper wire inside the apartment; could get a slightly longer stretch this way than outside. Which of these do you think would give me the best results with a regenerative receiver and vacuum tube detector?

Answer—No. 3 would give you the best results. You get 40 feet of wire, stretched clear of all obstructions and away from whatever distortional effect upon the electro-magnetic waves the steel work of your apartment house might have. I think this will give you good results.

Can't Stretch Aerial Over Street

Question—Are there any statutes prohibiting the use of telegraph and telephone poles as supports for aerials? Can we stretch an aerial across the street? What is the meaning of QRK, QSA and QRM?—R. O.

Answer—You cannot use a telegraph or telephone pole without permission from the telegraph or telephone company. A pole such as is used for telegraph or telephone posts could be used and would make an excellent mast for the support of an aerial. It is against the law to erect an aerial across the street. The three-letter codes that you ask about are abbreviations in radio communication and authorized by the International Radio Convention. They cover stereotyped questions and answers constantly in use between wireless telegraph operators and were designed to speed up communication by eliminating entire sentences. The three that you mention mean, first—QRK—"How do you receive me?" In this case the "QRK" is followed by a question mark. In answering, QRK also stands for: "I am receiving well." In a question form means: "Are my signals strong?" In answer form: "Your signals are strong." QRM—"Are you being interfered with?" and the answer form: "I am being interfered with." In this connection QRM is generally used to indicate terrific and instant interference. For instance, operators usually say: "QRM fierce"; or, "QRM very bad here." Other well-known and constantly used abbreviations are: QRN—"Atmospherics are very strong." QRU—"I have nothing for you." QSY—"Let us change to the wave length of ——— meters." This is generally used in some such form as the following: "QSY 450."

Noises Caused by Heterodyne

Question—In 1916 or 1916 I installed an aerial directly over the apartment in which I was then living in Washington Heights. I was on the top floor. The aerial was composed of a couple of wires about fifty feet long, with a lead going downstairs to about second floor. After this had been installed I used to hear, sometimes in the day but mostly in the evening and at night, a loud humming noise. Sometimes it was so loud as to be really annoying and seemed to fill the whole room. It would rise and down the scale and also increased and diminished in intensity. Sometimes it stopped abruptly and sometimes it died away. At times it would last for several hours with short silent intervals. There were also at times very definite "beats" heard. No doubt you know what I mean. It was not caused by the wind in the wires, as they were too short and too loose and the noise was much too loud. There was an electric elevator in the building with an alternating current motor, but that had nothing to do with the noise, as I was well acquainted with the hum of an alternating current motor and would not mistake it for it. I could often hear the elevator while the other noises were going on. The humming sound that I refer to seemed louder at night and it could often be heard at 2 or 3 o'clock in the morning. It could not have been the amateur sending, as the noise was too constant and too long kept up. I could only imagine that wireless messages or static electricity were being caught by the aerial and transmuted into sound in some manner. Do you think that could be the explanation and is it a common thing to hear such noises where there is an aerial installed? When the country entered the war the aerial had to come down and the humming noises ceased from that time. It could not have come from the wind acting on the wires, for as stated above it was loudest on perfectly calm nights. Any information you can give will be greatly appreciated.—B. R. W.

Answer—The amateur was undoubtedly experimenting with an oscillating tube, and when you heard the tone going up and down the scale he simply varied the capacity and inductance of the circuit, and thereby produced different tones. The definite beats that you heard were the result of continuous wave signals received from some continuous wave telegraph transmitting station and the amateur using "heterodyne" effect for reception. This effect was explained in detail last Sunday. I am quite sure that this is the explanation of what you heard.

Copper-Covered Wire for Aerials

Question—Is aluminum wire as good as copper wire for an aerial? Can a vario-coupler be used on a crystal set, and is it as good as a loose coupler, and why? Where is the biggest wireless station in the world?—H. B.

Answer—Copper wire is much better than aluminum wire. It is very necessary to have a highly conductive metal for radio-frequency current, which travels only on the surface of the wire. Copper, however, after it has been erected for some time, sags considerably because of its softness. The ideal wire for aerial construction is the steel wire that has a copper coating. A vario-coupler can be used on a crystal set and will be connected in exactly the same way as the loose coupler. It is much more efficient than the latter, because the coupling between the primary and the secondary is obtained with a minimum of energy loss. The largest wireless station in the world is located at Rocky Point, L. I. It is already in operation, communicating with different parts of Europe, but the station itself is not yet completed. When complete it will have a series of aerials designed for simultaneous but independent communication with different parts of the world, including practically every continent.

How an Airplane Sends

Question—1. I am planning to get a regenerative set, using a vacuum tube detector, two variometers and a vario-coupler. I live 50 miles from Schnectady, 100 miles from Newark, 200 miles from Springfield and 250 miles from Pittsburgh. Which of these stations should I receive with that set? 2. How is it than an airplane, being in the air, can send messages to a station on the ground, since the plane has no ground? Is there any reliable dealer now who has vacuum tubes for sale? 3. We have a thirty-two-volt farm lighting plant for sixteen batteries and dynamo. Could I connect three of the batteries to the filament of the detector bulb without disconnecting them from the rest?—E. J. M.

Answer—1. With the set you have and a proper aerial as high and clear as possible you should be able to receive the first three stations. You may be able to hear Pittsburgh, too. 2. An airplane can communicate by means of radio telegraph or radio telephone without the use of a "ground." As a matter of fact, a "ground" is not necessary at all for wireless communication, provided that another aerial is used which will counterpoise the transmitting aerial. In fact, it is known as a "counterpoise." In the case of the airplane, this is obtained by making a connection to all the metal parts of the airplane structure, such as the engine, wire sets, etc. The aerial itself drops from the fuselage and hangs down clear—the length of the aerial being determined by the length of the wave it is desired to communicate upon. The broadcasting stations in practically every case do not use a ground connection. All of them, so far as I know, use a counterpoise aerial for the ground. 3. Getting vacuum tubes at the present from dealers is a question of luck, and I cannot advise you just which one can meet your requirements. 4. It will be perfectly possible for you to use three of the cells in your sixteen-cell battery for the purpose of lighting up the filament tubes. The only drawback to this will be when you are charging the batteries you will get a reproduction of the commutator hum from the dynamo through your set.

Using a Double Slide Tuner

Question—I should like to know how to use a double slide tuning coil and how to find 250 meters on it. I am using a Galena detector, a grid condenser, and a pair of 2,000 ohm phones with this tuning coil. I live in an apartment house, and can erect no outdoor aerial so I have a 15-foot three-wire indoor aerial, but I can hear only spark signals.—L. D.

Answer—Connect your aerial with one of the terminals and your ground to one of the slides. Now connect a wire to the same terminal where you have the aerial and join one terminal of the detector to the other end of this wire. Then take a wire from the remaining terminal of the detector and attach it to one of the terminals of your telephone. Join the remaining terminal of the telephone to the second slide of your tuner. Place the grid condenser across the two telephone terminals. You will now have to adjust the two sliders until you get music from Newark. I doubt very much whether you will get very good results, or in fact any results, with an indoor aerial and a crystal detector.

Connecting Lightning Arrester

Question—In a lightning protective device what sized wire shall I use from the aerial to the switch and from the switch to the receiver? 2. Is a honeycomb coil the same as a tickler? If so, why what name is the tickler coil listed?—R. K.

Answer—You should use No. 14 bare copper wire or No. 17 copper clad to make a connection from the aerial to the lightning protector or lightning switch. The same sizes in covered wire can be used to make a connection from the protective device or the switch to your receiving apparatus. 2. A honeycomb coil can be used for the purposes of a tickler coil, but it should be used in conjunction with the honeycomb coil set, where coils of that description are used for the primary and secondary. These three coils are carried in a special mounting, which is so arranged that the position of the primary coil and the tickler coil can be varied in their relationship to the secondary coil.

Harmonics Cause It

Question—I have a regenerative receiver and vacuum tube detector, which is made to receive a maximum wave length of 800 meters, but I get Bedloe's Island, which I understand sends out on 1,650 meters, although it is very faint. Please explain why I get this station at all. I also get KDKA very faintly. If I attach a two-step amplifier will this bring those stations out clear and strong?—E. M.

Answer—The reason that you receive from Bedloe's Island is because that station has two harmonics. By this is meant that he radiates three separate waves, the two weaker waves being harmonics of the main, natural wave length. It is practically the same thing as in the case of music where a certain note is struck—the same notes in lower scales or higher scales will vibrate. The addition of a two-step amplifier will, of course, amplify this harmonic of Bedloe's Island and the weak signals that you obtain from KDKA.

Aerial and High Tension Wires

Question—I am in difficulty as to the correct way to erect my aerial. There are high tension wires running on both the front and side of the building and there is a vacant lot in the back.—R. V. P.

Answer—Place your aerial diagonal to these power lines and erect it as high and clear as you can. Take advantage of the back lot to put in as tall a pole as you can get. Then, if possible, get a flat top wire 150 feet long and make a connection in the center for your lead-in. This will give you a "T" type of aerial that will receive signals equally well from all directions and, due to the fact that it does not run parallel to either of the two high power transmission lines, you will not receive any interference therefrom.

Tuning Coil Too Big

Question—I have a crystal set consisting of 4,000-meter Arlington transformer, 23-plate variable condenser, one good crystal detector, one fixed condenser and a 2,000-ohm head set. The aerial is 100 feet long and 30 feet high, single strand. I receive broadcasting and voice messages from 2XJ (Bud Beach), but I cannot hear WJZ. Kindly tell me why I cannot receive the latter. Tell me if I need any other part.—P. K.

Answer—Your oscillation transformer is too large for short wave reception. You probably will be able to get better results if you place another 23-plate variable condenser in series with the aerial and the primary of this oscillating transformer.

Parts for Crystal Set

Question—Please give me the connecting plan and list of parts for a radio receiving set. I do not just an ordinary tuning coil plan but one that will give the best possible results without the use of batteries.—A. B.

Answer—The best results that can be obtained with the crystal detector are by using a vario-coupler, one variable condenser of forty-three plates, a crystal detector, one pair of head telephones and a fixed condenser. They should be connected up as follows: Aerial connected to one end of the primary of the vario-coupler and the ground connected to the other end of the primary. The variable condenser should be shunted across the secondary of the vario-coupler. A lead should be taken from one end of the vario-coupler to one side of the crystal detector. The remaining side of the crystal detector should be joined to one of the terminals of the telephone. The other terminal of the telephone will then be joined to the remaining end of the secondary. The first condenser should be shunted across the telephone leads. The set will then be ready to operate.

Honeycombs as Loading Coils

Question—Is there any way that I can increase the wave length of my receiving set by using honeycomb coils? How many meters could I increase it? Would it be possible to increase it sufficiently to get the arc stations? I am using a single coil tuner with a crystal detector set.—E. B. H.

Answer—You can use honeycomb coils to load up this set. The size of the coil will depend a great deal upon the length of the wave you desire to listen to. Most of the arc stations are operating on wave lengths ranging between 4,000 and 6,000 meters. To receive them it will be necessary to place a 300-turn honeycomb coil in series with your aerial and the tuner.

Single Taps Also Necessary

Question—(1) Is a vario-coupler has taps every ten turns, is there anything gained by taking taps off each of the first ten turns, or will the use of the variometer eliminate the need for this? (2) I find that the rotation of the primary of the vario-coupler is of very little use in tuning. Is this as it should be? (3) I have not shielded my set as yet, consequently it is necessary to keep one hand on each variometer the while listening to WGY. Will shielding remedy this? I imagine that shielding will really remedy this, but will the sensibility caused by body capacity be lost? (4) What are the chief differences in principle operating and efficiency of honeycomb and spiderweb or stacker-wound coils? (5) How would you explain the fact that cutting out one wire of a two-wire aerial 125 feet long has no effect on the tuning or intensity of sound? (6) Will you kindly give me the times and locations of the following stations: 2CBJ, 2AYZ, 2BGI, 2CJB, 2IA and WHN?—S. F.

Answer.—(1) You will be able to get very much closer tuning by taking taps off each of the first ten turns of your vario-coupler and connecting them to a suitable switch. This arrangement will permit you to make the adjustments that bring in any combination number of turns and consequently give you very much closer tuning. (2) The secondary of your vario-coupler should be the rotor, and it should make a material difference in the tuning. (3) It is very necessary for you to shield the set, as that will eliminate all of the body capacity effect that you are now suffering from. Shielding will not affect its sensitivity. (4) All of the coils that you mention operate on the same principle for the purposes of receiving, the only difference between them is that of space in winding. They are all designed to eliminate distributed capacity of wires and the objectionable features connected with capacity of this character. (5) For the purposes of reception, there is no advantage in using the two-wire aerial or any multi-wire aerial. The single wire aerial is as efficient as any; in fact, it is more efficient, because it does not bring in extraneous interruption from spark stations, etc. (6) Station 2CBJ is that of Frederick A. Dale, 5 Parker Street, Everett, Mass.; 2AYZ is that of A. A. Leonard, 79 Connecticut Avenue, Greenwich, Conn.; 2BGI belongs to C. W. Eisenhimer, 530 Broad Street, Meriden, Conn.; 2CJB belongs to E. J. Riedenour, 52 Fairfield Avenue, Bridgeport, Conn., and WHN—I cannot advise you at this time.

How to Wind a Variometer

Question—In winding a variometer, does the wire run in the same direction on the stator as it does on the rotor? In connecting a stator to the rotor, does the wire run from both back ends or from the ending of the stator winding to the beginning of the rotor?—L. H.

Answer—In constructing a variometer the winding should be continuous and in the same direction on both the stator and the rotor. The connection between the two should be made from the end of the stator to the beginning of the rotor. The difference in direction is obtained in the circuit by turning the rotor, and when the inner coil is turned so that its axis coincides with the axis of the outer coil and the current circulates through both windings in the same direction their magnetic fields add to each other and the self-induction of the variometer is then at its maximum. If the rotor is then turned around completely the current circulates through the two coils in opposite directions and their magnetic fields oppose each other, the result being that the self-induction of the variometer is then at the minimum or practically zero.

Dry Cells for A Batteries?

Question—Can I use dry cell batteries for the purpose of lighting the filament of my vacuum tubes, instead of storage batteries? I notice that when I connected up as according to a diagram which I obtained from a magazine it did not work. I happened to change the battery connections and the signals came in very strong.—G. F. A.

Answer—Dry batteries can, of course, be used for lighting the filament of a vacuum tube, but, as the tube consumes a little more than one ampere, the dry cell battery will undoubtedly not last very much longer than ten or fifteen minutes before being run down. There is no real satisfying or satisfactory substitute for the storage battery for this purpose, and a storage battery where three vacuum tubes are being used should be at least eighty-ampere-hour capacity. It is very important that the correct positive and negative connections should be made to a vacuum tube set and it frequently happens where radio fans are unable to receive music and speech that their trouble lies right at the batteries. A simple way to determine this, whether or not the correct connections exist at the batteries, is by the following: First, it is absolutely fundamental that the positive side of the "B" battery should be connected to the plate of the vacuum tube. There can be no mistake made on this point. Second, with this fact established as a starting point, all that is necessary is to try the negative side of the "B" battery (which, of course, must be connected to one of the terminals of the "A" battery), first on the positive pole and then on the negative. It will be quickly seen which of these two connections gives results and then all that is necessary is to leave the connections there permanently.

Using a Crystal Set

Question—I have a crystal detector set. I live in New Jersey near Newark. What I want to know is, will I be able to hear on this set when the broadcasting station is transferred from Newark to New York City? Would this also apply to a home-made loose coupler crystal detector set? I should also like to know whether or not a lightning resister, that is attached to the wire, like a plug, will serve the same purpose as a lightning switch and would it be just as safe?—H. H. H.

Answer—A crystal detector set will receive music and speech at a maximum distance of twenty-five miles under normal conditions and as you come within that distance you will be able to receive the station which is to be erected in New York City. This applies to both of the sets that you have described. In some cases, of course, it is quite possible to receive greater distances than twenty-five miles with a crystal detector, but the limit of twenty-five miles is the general average for normal conditions. The lightning resister should be attached to the outside of your building at least five feet clear of the building by means of insulation. The aerial should be connected to one side of it and an outside ground to the other. This outside ground can be obtained by driving an iron pipe several feet into the ground. A lead from the same terminal to which the aerial is attached should then be taken into your house and attached to the terminal of your apparatus which is marked "aerial." You will also need an inside ground connection for your receiving set. This can be obtained by soldering a wire to your water pipe system. If these directions are followed out carefully you will not need an aerial lightning switch, as the lightning resister will be absolutely automatic in its operation. In fact, I am sure the new fire regulations will eliminate the switch entirely.

Anglo-Swiss Radio

GENEVA, Switzerland, April 15.—Wireless service between Switzerland and England was inaugurated at noon Wednesday with a message from the President of the Swiss Confederation to King George. One hundred words a minute were transmitted.

Let The Tribune Help You Solve Your Radio Problems

IF YOU are experiencing difficulty with your receiving set write to Jack Binns, the Tribune Radio, 154 Nassau Street, New York City. In your letter state what your trouble is, what kind of apparatus you are using and any other facts you think necessary. If you desire to install a receiving set and need advice write to the Tribune Radio, stating whether you live in an apartment or a private house, and if outside the city your distance from New York. Questions of general interest will be answered in this department every Sunday. Requests for personal answers should be accompanied by a stamped and self-addressed envelope.

The Radio Primer

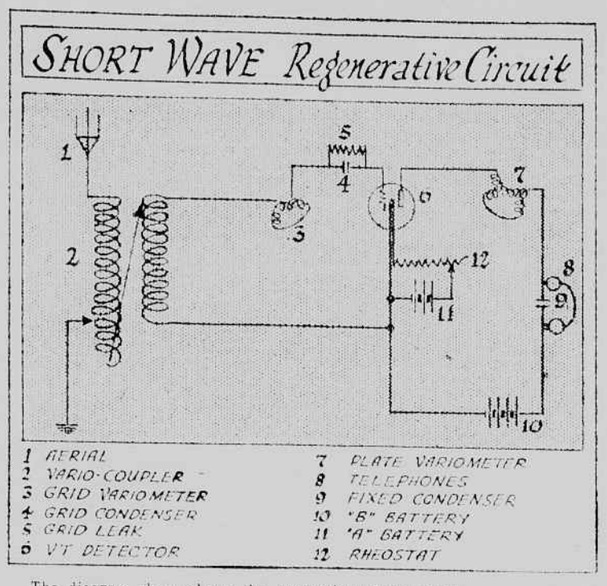

The diagram above shows the connections for a short wave regenerative receiver using a vario-coupler and two variometers. It is practically the most efficient form of receiver for short waves, and as the majority of broadcasting stations are sending out music and speech on a 360-meter wave, it is well suited for the reception of entertainment.

In this case the primary of the vario-coupler is variable, taps being taken off each of the first ten turns and then off each succeeding eight turns. These taps are connected with two separate switches in such manner that any number combination of turns can be put into the circuit when tuning. The grid variometer completes the tuning of the secondary oscillating circuit and the plate variometer gives a "feed back" or regenerative action. This circuit, being regenerative, is covered by Armstrong patents.

Daily Radio Program

Sunday, April 16

WJZ, Newark (360 meters)

3 p. m.—Radio chapel Easter services; Sermon, "The Meaning of a Future Life," by the Rev. William Neely Ross; Easter music by the choir, Miss Lillian E. Fowler, organist and director; Chelsea Presbyterian Church, New York.

4 p. m.—Recital by Peggy Wood, prima donna soprano; program: "There Is a Green Hill Far Away," "Come Ever Smiling Liberty," "Good-Bye," "With Verdure Clad," "Last Rose of Summer."

6 p. m. "Sandman Stories," by Abbie Phillips Walker; "The Bubble Book That Sings," by Ralph Mayhew.

7 p. m.—Sacred music recital by the orchestrelle and piano.

8 p. m.—Recital by Alberto Terrasi, baritone.

9 p. m.—Recital by Inga Orner, Norwegian soprano; program: "There Is a Green Hill Far Away," "Ave Maria," "La Serenata," "Chanson de Florian," "Obstination," "Vergeblicnes Standchen," "Waldfahrt," "A Yeg Elsker Dig," "Vandring i Skoven" and "God Morgen," "I Know a Lovely Garden," "If I Knew," "An Open Secret," "Along the Road," "Good Morning, Brother Sunshine," "Goodby."

9:45 p. m.—Concert by Issay Mitnitzky, Russian virtuoso, who will play his 300,000 Cremonia. The program: "The Dear Irish Boy," "Valse Melancolique" and "Scherzo," "Gavotte," "Serenade Melancolique," "Nocturn D Major" and "La rende des lutins."

WBZ, Springfield, Mass. (360 meters)

3 p. m.—Radio chapel services by Dr. Farnham, of Advent Christian Church.

8 p. m.—Sermon by Rev. Herbert E. Evans. Musical program by International Y. M. C. A. at studio.

KDKA, Pittsburgh (360 meters)

10:45 a. m.—Services of the Point Breeze Presbyterian Church. Dr. P. H. Barker, minister.

2:15 p. m.—Children's Bible stories, "The Surprise of Pay Day."

2:30 p. m.—Religious musical program by Galbraith Brothers, "Messengers of Good Cheer."

3 p. m.—Radio chapel at Station KDKA, conducted by Rev. Dwight L. Myers, pastor Brushton Methodist Episcopal Church.

7:30 p. m.—Services of Calvary Episcopal Church, Rev. E. J. Van Etten, rector.

KYW, Chicago (360 meters)

3:00 p. m.—Radio chapel, conducted by the Rev. John H. Williamson; sermon, "The Living Christ and His Relationship to Chicago."

2-IA, Jersey City (200 meters)

6:57 p. m.—Tuning test.

7 p. m.—Radio chapel vesper service. Vocal trio, "Jesus Christ Is Risen Today."

7:05 p. m.—Sermon from St. Mark's 16th chapter, 3d verse, by Rev. Parker C. Manzer, rector of St. Mary's P. E. Church, Jersey City.

7:15 p. m.—Soprano solo by Miss Mildred Durian.

7:20 p. m.—Piano solo, sacred number, by Edw. S. Breck, organist and choirmaster St. Mary's Church.

7:25 p. m.—Prayer by Rev. Parker C. Manzer, followed by closing hymn, "The Strife Is O'er," vocal trio.

7:30 p. m.—Announcements.

7:32 p. m.—Recital by A. Helen Robinson, dramatic soprano. (a) "Hosanna," (b) "Daddy's Sweetheart," (c) "Crying of the Waters," (d) "The Nightingale," (e) "Wake Up," (f) "Visse d'Arte." Mme. Louis Chartier will accompany at the piano.

WGI, Medford Hillside, Mass (800 meters)*

7:45 p. m.—Police reports for City of Boston.

8 p. m.—Radio church service. Sermon by Rev. Walter Healey, pastor Methodist Episcopal Church, Dorchester. Music by Grace Episcopal Church boys' choir, Medford; C. B. Durland, bass baritone, Mount Vernon Congregational Church. Selections: "Lift Up Your Hands, O, Ye Gates," "Mother o' Mine," "A May Night." Accompanist, Miss G. MacDonald.

*Daylight saving time.

Books on Wireless

PRACTICAL AMATEUR WIRELESS STATIONS. Compiled by Andrew White. Wireless Press, Inc., New York City. Price 75 cents.

This volume consists of a compilation of the best suggestions gained from experience by thirty-three experimenters in constructing amateur stations. It contains many useful aids and hints to the amateur. Every phase of reception is covered in the book, from aerials to ground.

The author in his foreword says: "Uncounted hours of patient experimenting are represented in the writings of the thirty-three representative experimentrs contained in this volume, and it is their generous spirit of helpfulness to embryo and undeveloped wireless workers that has made possible this record of results and final conclusions."

Among the hints contained in the book is one showing the manner to lock a variable condenser into position once it has been tuned.

Voice Carried On a Train Of Waves

Radiophone Made Possible by Continuous Waves, Which Act as Pathway Throughout the Ether

Triumph of Science

Important System Developed by Perfect Reasoning and Careful Application

Ever since the radiophone entertainment swept the country with cyclonic force the average radio novice has spent days and nights trying to grasp the underlying principles upon which the music is sent through space without intervening wires. What are the electric waves? How are they produced? How do they travel?

In the answer to these questions lies the story of one of the most remarkable developments ever accomplished by the genius of man. It is the story of perfect reasoning in theory followed by successful practical application, and it is my intention in this article to outline briefly the manner in which it was done, and so at the same time explain how the voice is carried through the ether to a million homes every night.

When wireless telegraphy was first put into practical operation the electro-magnetic waves were produced by means of a spark. In fact, the operators were quickly dubbed "sparks" by passengers on liners because of the spectacular characteristics of wireless in those days. Now, spark telegraphy was very inefficient. It produced a train of electro-magnetic waves which quickly died down to zero and there was an appreciable amount of time between each train of waves. This time, although measured in millionths of a second, was nevertheless a very serious handicap; in fact, so serious that wireless telephony would never have been possible with it.

Continuous Waves Sought

In studying the problems the scientists figured that if a continuous train of waves could be produced it would not only increase the efficiency of wireless telegraphy, but radio telephony could also be achieved. It was worked out in theory that if an alternating current of 50,000 cycles a second or more could be produced it could be utilized for radiating continuous waves from an aerial without any zero or "damping" effect.

This conclusion was reached after careful mathematical calculations based on the fact that electro-magnetic waves travel through the ether at the rate of 300,000,000 meters a second. As an instance, it was quickly determined that with a current of 50,000 cycles a second a wave of 6,000 meters would be obtained, and such a wave would be ideal for transoceanic radio-telegraphy. For telephone purposes it was realized that shorter waves would be required and consequently much higher frequencies.

The question was how to produce such high frequencies. The highest commercial frequency at that time had been 120 cycles per second. Various attempts to build high frequency alternators had been unsuccessful because of the small power output. Success finally came with the adoption of an electric arc, which was followed by the successful Alexanderson alternator now in use at the large trans-Atlantic wireless telegraph stations.

About this time developments which had followed the discovery of E. H. Armstrong that a vacuum tube could be made regenerative resulted in the so-called oscillating tube, which greatly improved transmission by making it possible to produce any desired frequencies up to 300,000,000 meters a second. Every wave length was thus made possible and radio-telephony immediately became an actuality.

Now, the manner in which the oscillating tube operates is as follows: Immediately the current is turned on into the filaments of the transmitting tube, oscillating currents are set up in the circuit attached to it and these currents are radiated from the antenna in every direction after passing through the oscillation transformer. These currents are simply electro-magnetic waves which surge through the ether in every direction, and as they are absolutely continuous, they form a path for the voice to travel along, in exactly the same manner as the wire between two subscribers offers a path for their voices on regular land telegraphy.

Voice Travels on Waves

Having produced this path of waves in which the voice travels, the next thing to do is produce the voice currents that will be carried along it. For this purpose other oscillating valves, known as modulators are employed, and the circuit attached to them is so arranged that it will produce alternating currents which vary within the range of the human hearing—that is, from 20,000 cycles a second downward.

From this it will be readily seen that in actual radio-telephony we have two sets of oscillating currents which are going through the ether. The first is known as radio-frequency current, because its frequency is so high that it is far above the ability of the ear to record; and the second is known as audio-frequency current, because it consists of frequencies that correspond to all the sounds which the ear can respond to. The former acts as the path for the voice and the latter is the voice translated into electric current.

By this time practically every radio fan has heard of these two terms—radio-frequency amplification and audio-frequency amplification. In most of the radiophone receivers now in use there are two stages of audio-frequency amplification. This consists of two vacuum tubes with suitable transformers connected to them. They build up and increase the voice currents that are received on the aerials.

Up to the present it has not been practicable to apply radio-frequency amplication to broadcast music and speech, but there is no doubt that the problems surrounding it will ultimately be solved and reception will be greatly improved.

Radio Auto Now on Stage

Two hundred radio experts have been invited to attend a demonstration of a radio controlled auto vehicle, invented by Edward F. Glavin, which will be given in the Hippodrome to-morrow night. The vehicle operates on the same principle as the radio-controlled torpedo, also invented by Mr. Glavin.

The novel car is to be made part of the theatrical attraction appearing at the Hippodrome and is the first radio device of its kind to be put upon the stage. It is to run at the theater for at least one week. The car will be personally demonstrated by Mr. Glavin, who is a member of the Institute of Radio Engineers.

COMPLETE ANTENNA OUTFIT

$4.00

This kit is just the thing for use with radio receiving sets which are purchased without antenna equipment. Packed in a neat cardboard carton, the kit comprises everything necessary to put up your outside antenna without purchasing anything additional. Simple instructions with each kit.

FREED-EISEMANN RADIO ACCESSORIES FOR IMMEDIATE SHIPMENT

"F-E" Radio Crystals. Each consists of a piece of stripe textedgalena, one embedded in a special alloy and is guaranteed to be the most sensitive on the market. Individually packed in a sealed moisture and dust proof wrapper to insure quality. 25 cents each.

"F-E" Condensers. Fixed fixed and special dielectric material and fitted with one of these condensers each grid and plate tube radio circuits. Grid capacity 250, 500 and 1000 cents each. Telephone capacity 0.005 and 0.01 cents each.

"F-E" Antenna Insulators. Best for use with home radio receiving antenna. Light in weight yet rugged and substantial. Made of glazed porcelain. 20 cents each.

"F-E" Radio "B" Batteries. These batteries are made in accordance with U. S. government specifications and are especially designed for noiseless operation of vacuum tubes, detector or amplifier. The best price is 22½ volts, fixed type, long life. 2.25 each.

At better-class dealers or order direct from our stock if your dealer is not supplied.
Dealers—Write for proposition.

FREED-EISEMANN RADIO CORPORATION
255 Fourth Avenue - - - - New York City
Inventors and Sole Manufacturers of the "MARVEL"
Send $1.50 for new book on wireless—150 pages—150 illustrations, together with our catalog.

PINK-A-TONE
DETECTOR OF THE MAX

PINK-A-TONE today radio phone tonight!

Ask your radio or electrical dealer about the 7 points of PINK-A-TONE superiority, one is the exclusive PINK-A-TONE NUGGET Detector, sensitive at every point. Another is

$25.00 complete with phones

Executive Office
1554 Broadway, N. Y.

$25.00 and $20.00

Wanted State Managers for Conn. also Mass.

to handle radio receiving sets and radio parts. Must purchase 100 sets on signing contract.

National Motor Accessories Corp.
1446-1448 Woolworth Bldg., N. Y. C.

RADIO for Everybody

A BOOK—accurate and dependable—by the Editor of the Scientific American. Specially written for the amateur. Tells what to buy and how to operate Radio Telephones—and how to listen in.

Price $1.50
By Mail $1.60

Get your order in today.

SCIENTIFIC AMERICAN CO. (Munn & Co.) 255 Broadway, New York

RADIO

Complete Receiving Sets and Parts to construct your own Sets.

Call and see the Branch Vacuum Gap Arrester $2.50

It protects your set from lightning—meets requirements of the Underwriters.

You are cordially invited to visit our store and listen to Concerts. Competent men will answer your questions and take care of your radio needs.

A call involves no obligation on your part.

David Killoch Company
Founded 1907
Wholesale and Retail
57 Murray Street Phone—Barclay 6518